Kastel EXP 30-45 Glasswasher/ Dishwasher

TAVOLA
A45

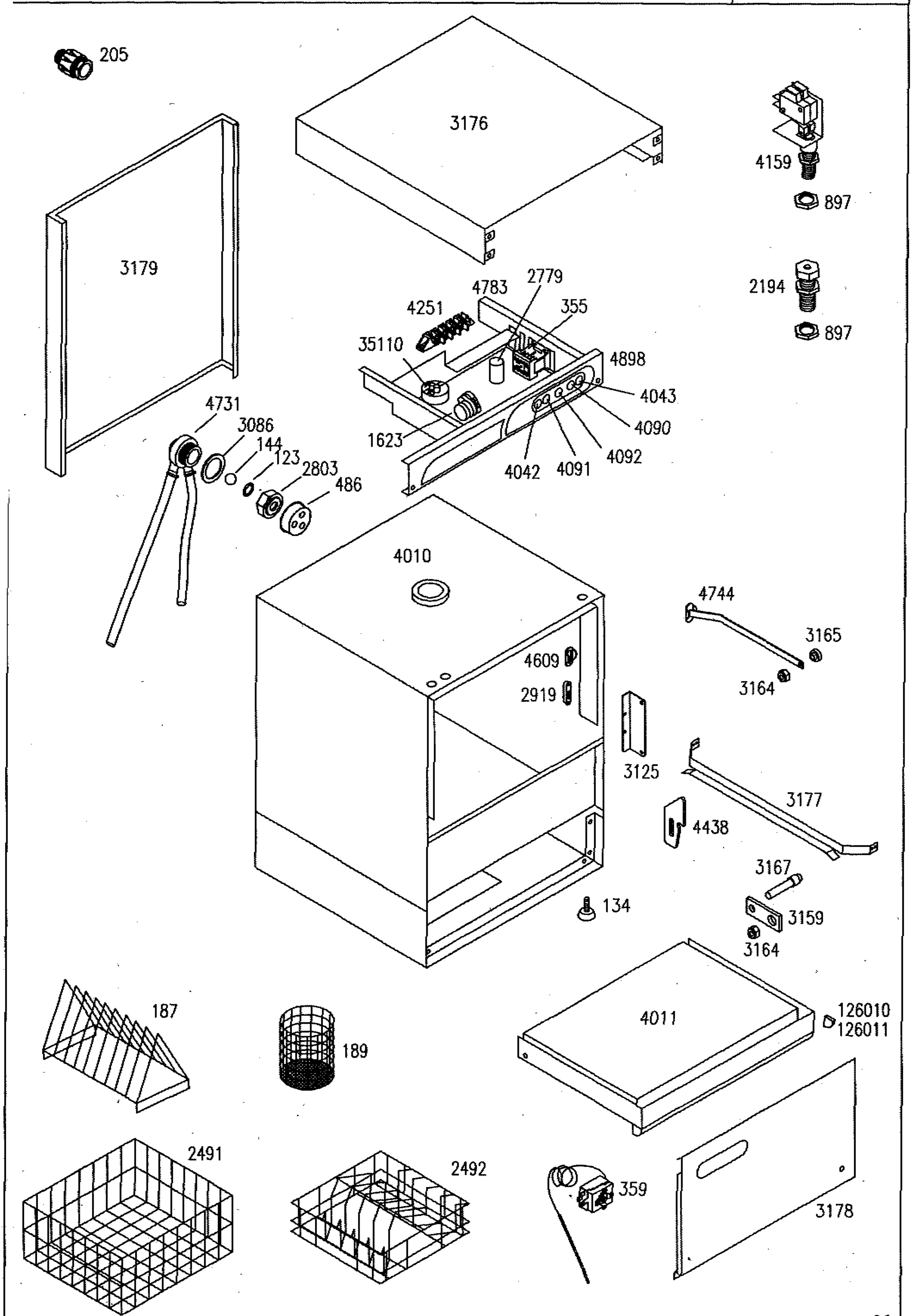

Kastel EXP 30-45 Glasswasher/ Dishwasher
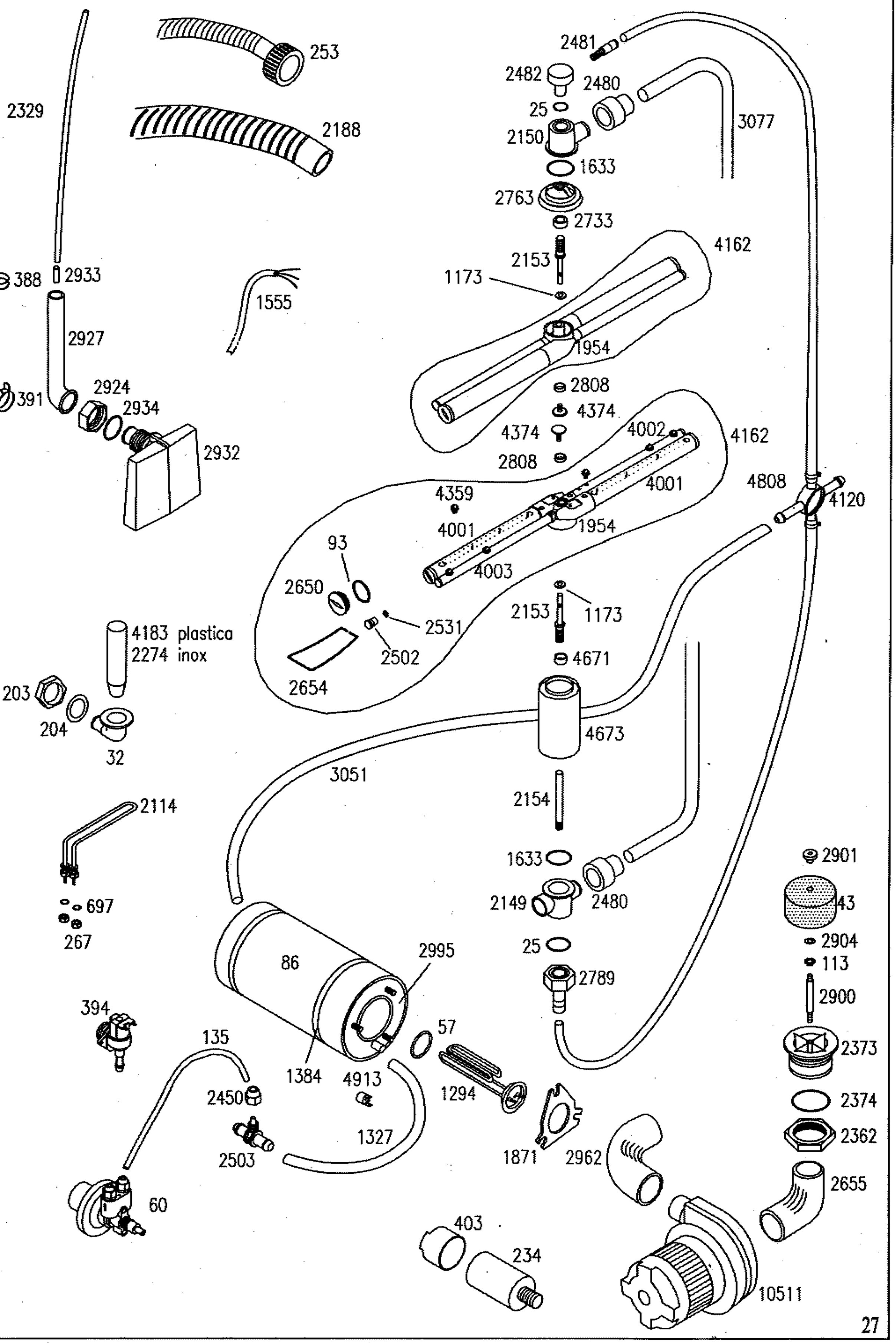
TAVOLA
B45