Kastel EXP 21-35 Glasswasher

TAVOLA
A35

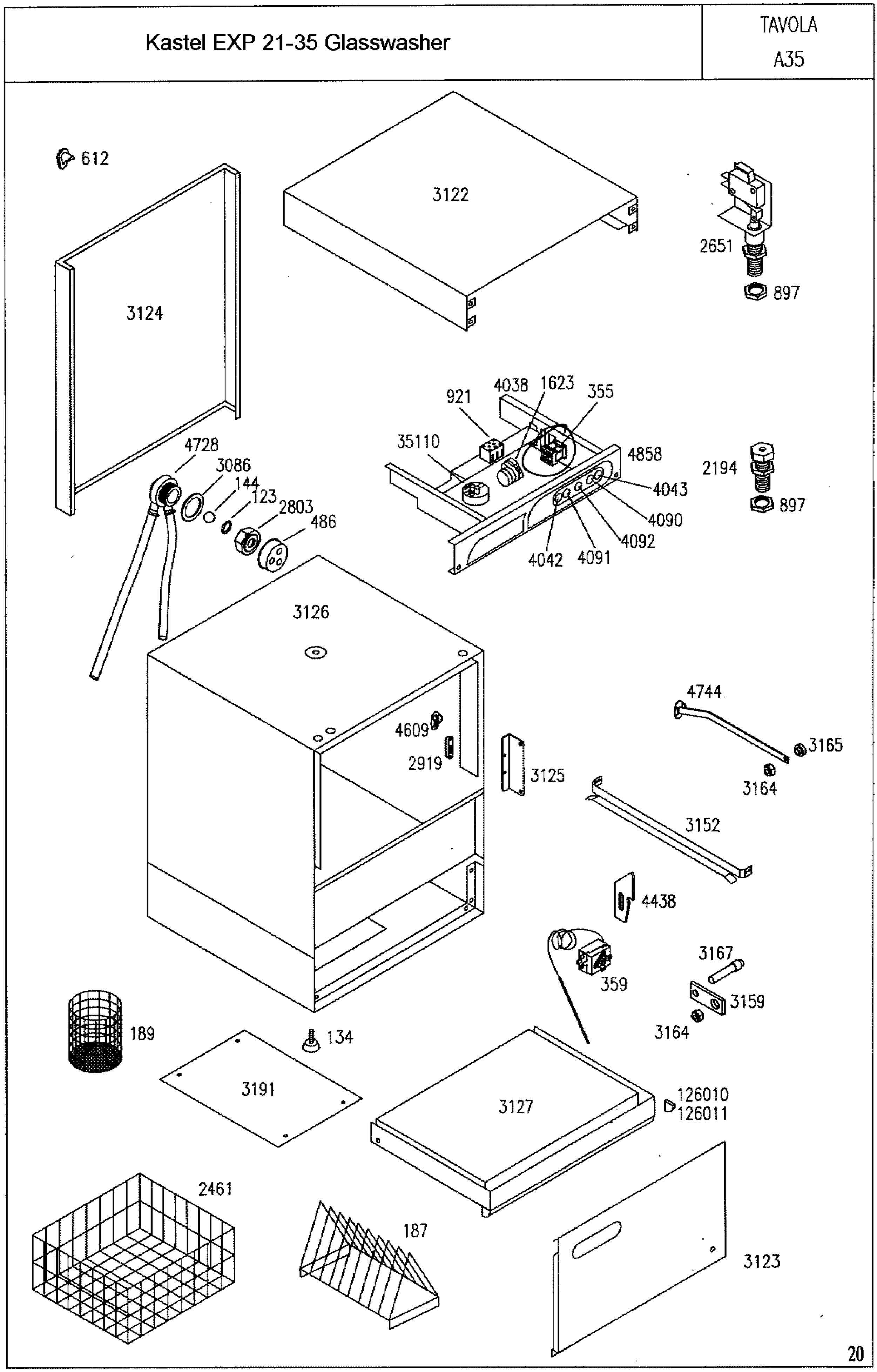

Kastel EXP 21-35 Glasswasher
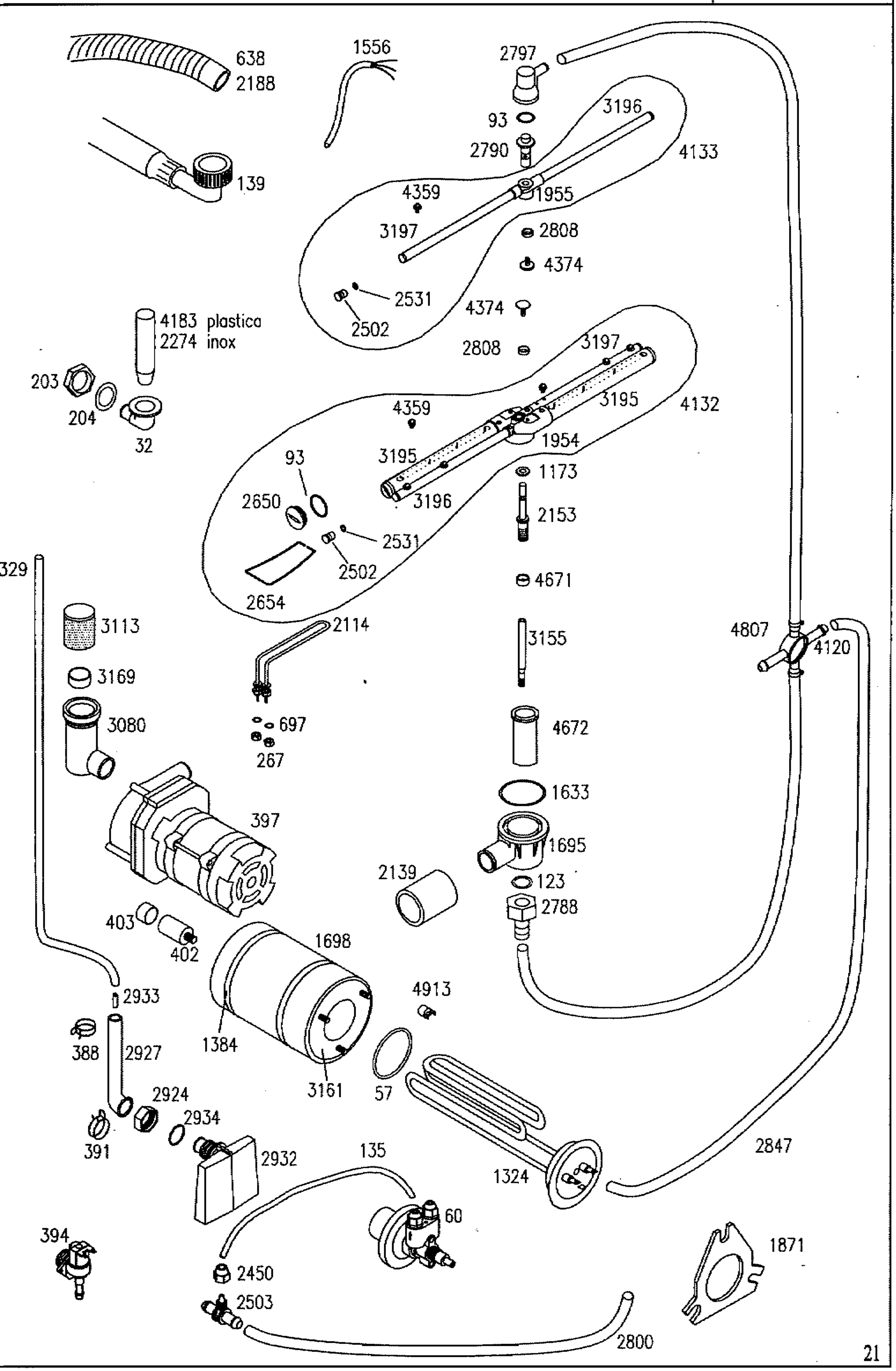
TAVOLA
B35